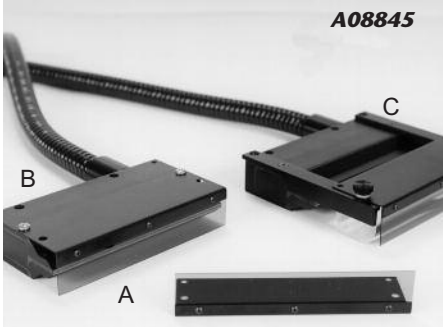

(A) Lightline polarizer assembly, A08845, (B) Polarizer affixed to a 5" lightline, (C) Polarizer affixed to a cylindrical lens on a lightline

Lightline Linear Polarizer Kits

Features

- Developed for use with 3" to 16" (227 to 406 mm) lightlines to enhance contrast on highly reflective surfaces for area and line scanning applications.
- Easily mount on SCHOTT lightlines alone or with cylindrical and apertured lenses affixed to the lightline.
- The polarizer(s) should be used with an analyzer supplied by the customer. The analyzer is typically attached to the camera objective.
- Two polarizers are included in the kit; one polarizes in the horizontal axis and the other polarizes in the vertical axis.
- Custom length configurations are available. Lead time is required

Linear Polarizer Kits

Lightline Part No.	Polarizer Kits Part No.
A08903	Custom
A08904	Custom
A08906	Custom
A08908	Custom
A08910	Custom
A08912	Custom
A08914	Custom
A08916	Custom
A08975	Custom

SCHOTT
glass made of ideas

Lightline Linear Polarizer Kits

Dimensions in ( ) are in mm

Product improvements may result in specification or feature changes without notice.

WITH LENS ASSEMBLY:

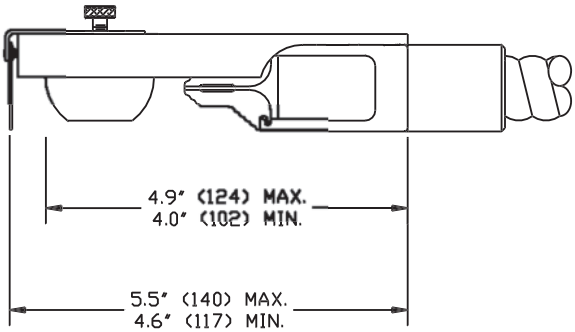

WITHOUT LENS ASSEMBLY:

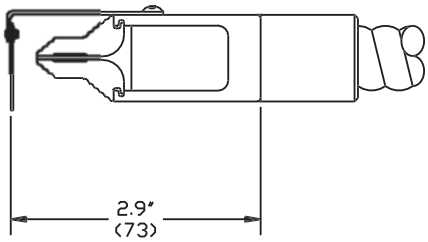

A08843 - A08856
Polarizers

Lighting and Imaging
SCHOTT AG
Otto-Schott-Str. 2
55127 Mainz
Germany
Phone: +49 (0) 6131/66-7752
Fax: +49 (0) 6131/66-7850
E-mail: lightingimaging@schott.com
www.schott.com/lightingimaging

SCHOTT
glass made of ideas