DCR® III Remote Light Source Kit, A20850 (light source not included)

Light Source Accessories	
Part No.	Description
A20850	DCR® III Remote Light Source Kit

DCR® III Remote Light Source Kit

Adds to the features of the DCR® III by allowing remote operation of the lamp head for energy chain and robot arm applications.

Standard Features

- Lightweight design - perfect for robotic arm applications.
- Intrinsically rugged design. Simple components in light head allow for operation in potentially harmful environments, while DCR® III power supply remains at a safe distance.
- 10' shielded extension cord allows product to be used in dynamic applications where a fiber optic bundle may fail in time.
- Light source connection includes modulamp nose piece to maintain airflow in the DCR® III power supply.
- CSA approved to UL spec, CE compliant to low voltage and EMC directives.
- Quiet rear exhaust fan.
- Modulamp® not included.

Universal Light Source, A20855

Light Source Accessories	
Part No.	Description
A20855	Universal Light Source

Universal Light Source

For applications where DC power is already available and the need for an economical light source exists.

Standard Features

- Many of the same functional features as the Remote Light Source Kit.
- Includes Modulamp®.
- Connectors are included.
- Power cable supplied by customer.
- CE compliant to low voltage directive.
- Will accept any MR-16 halogen lamp up to 150W/21V.

SCHOTT
glass made of ideas

DCR® III Remote Light Source Kit

Product improvements may result in specification or feature changes without notice.

Dimensions in ( ) are in mm

A20850

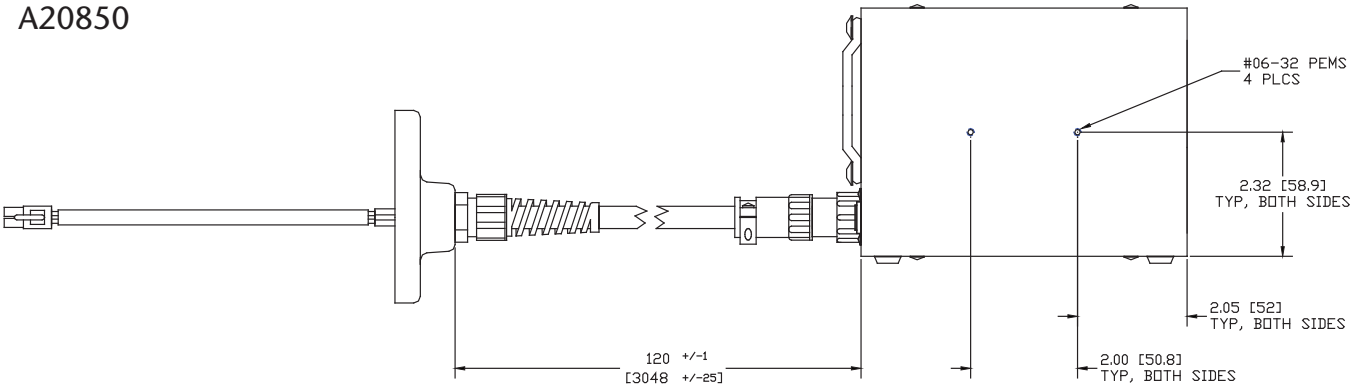

Universal Light Source

Dimensions in ( ) are in mm

A20855

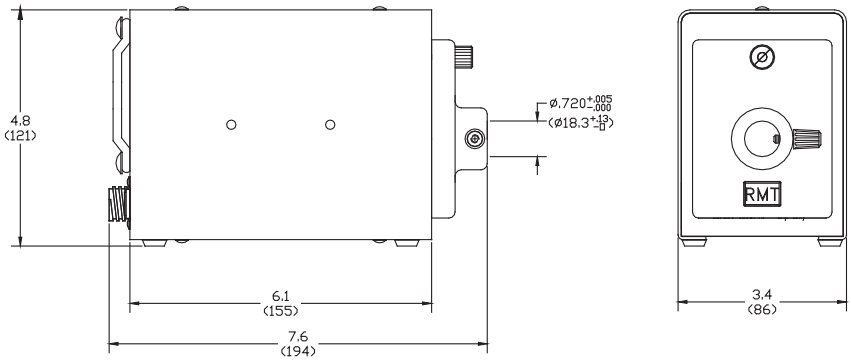

Input: 0 – 21 VDC

Lighting and Imaging
SCHOTT AG
Otto-Schott-Str. 2
55127 Mainz
Germany
Phone: +49 (0) 6131/66-7752
Fax: +49 (0) 6131/66-7850
E-mail: lightingimaging@schott.com
www.schott.com/lightingimaging

SCHOTT
glass made of ideas